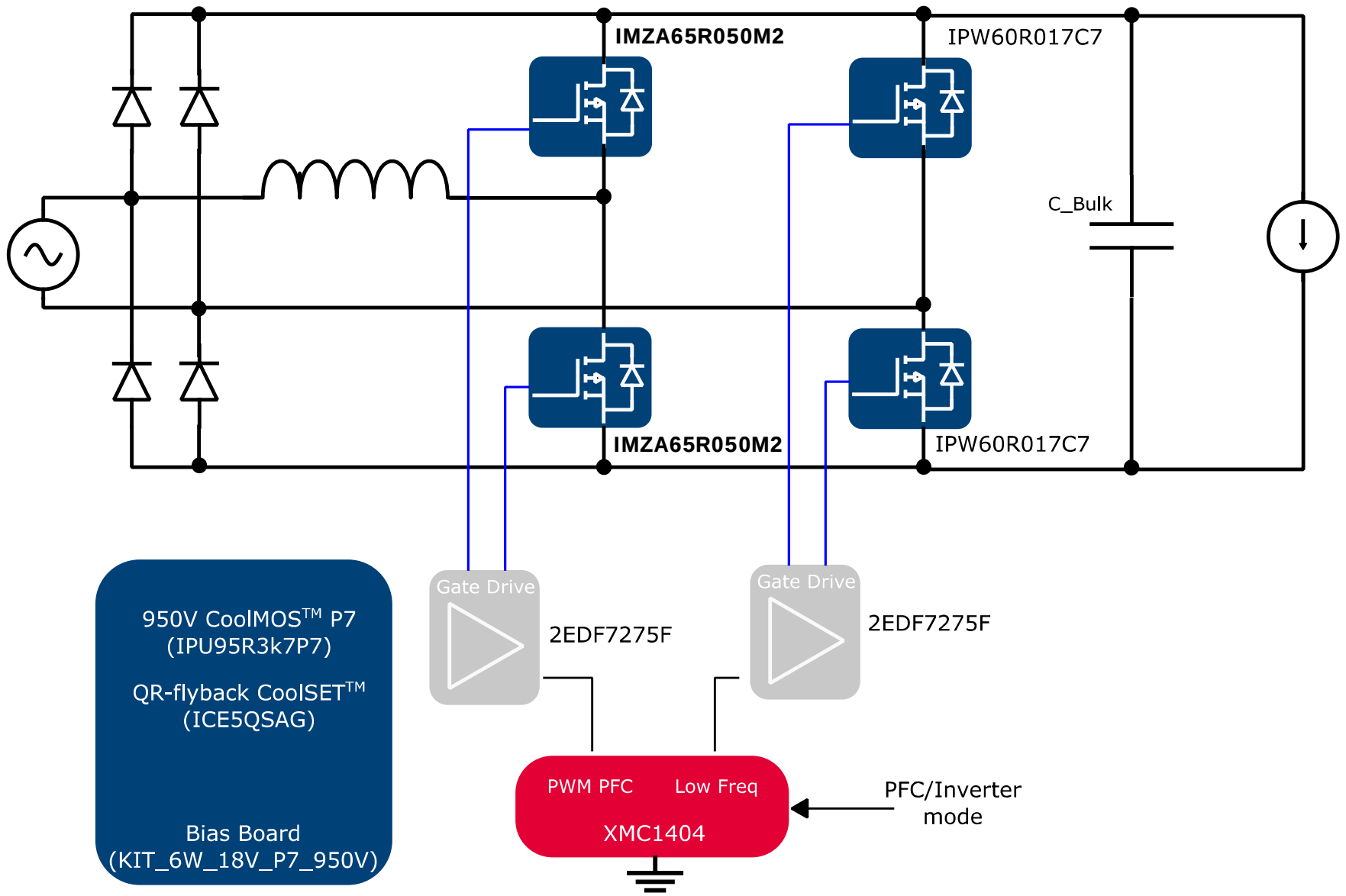
IMZA65R050M2
IPW60R017C7
C_Bulk
IMZA65R050M2
IPW60R017C7
950V CoolMOS™ P7
(IPU95R3k7P7)
QR-flyback CoolSET™
(ICE5QSAG)
Bias Board
(KIT_6W_18V_P7_950V)
Gate Drive
2EDF7275F
Gate Drive
2EDF7275F
PWM PFC
Low Freq
XMC1404
PFC/Inverter
mode